Confidential : All rights reserved ISO 16016. No part of this document may be reproduced ,stored in a retrieval system , or transmitted, in any form or by any means , without prior permission. All rights reserved in the event of the granting of a patent or the registration of a utility model or design. Offenders will be held liable for the payment of damages.

Easyflex ™

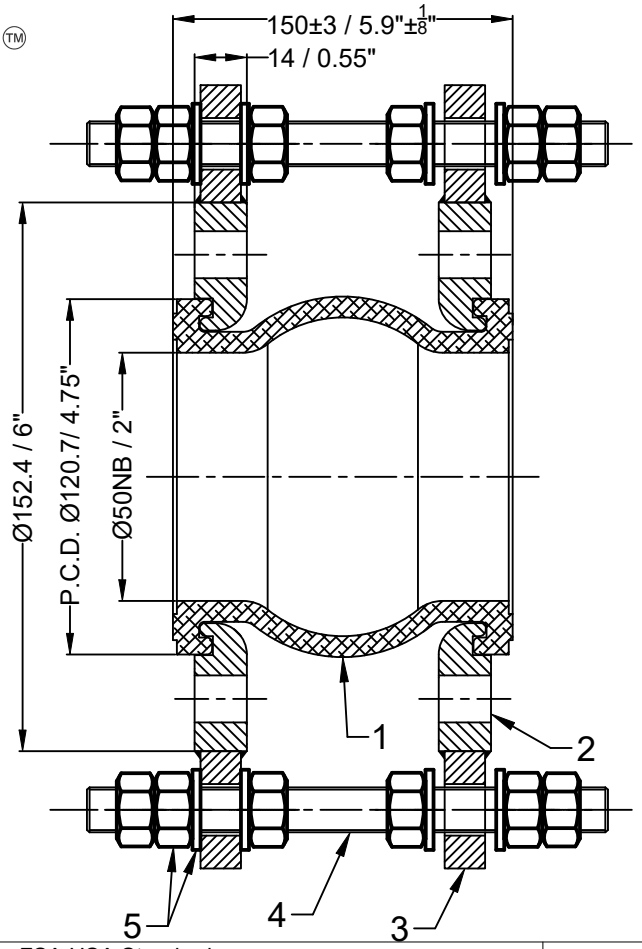


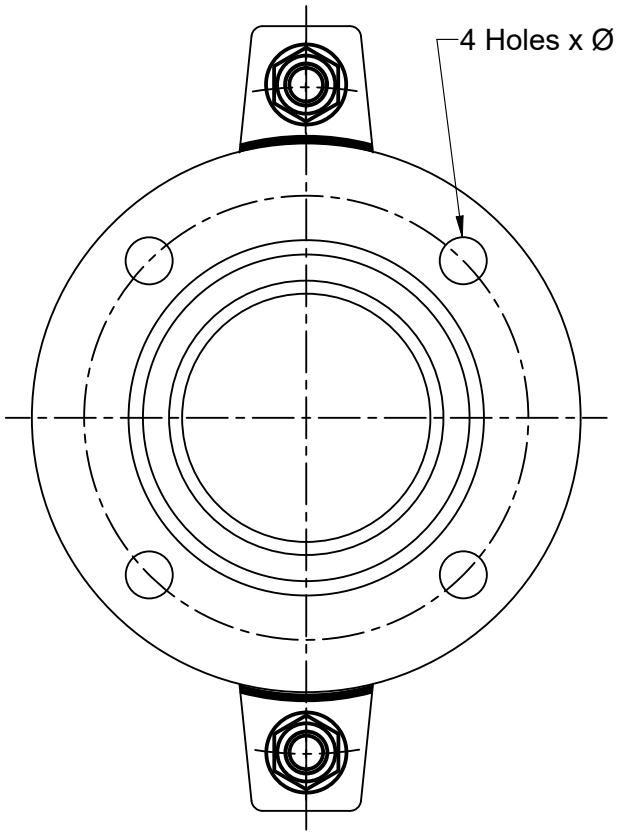


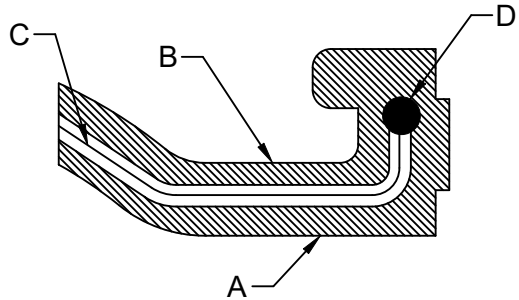


Bellow Cross-Section Details

| | |
|---|---|
| A. | Inner Cover EPDM |
| B. | Outer Cover EPDM |
| C. | Reinforce nylon cord fabric |
| D. | Hard steel wire |

| | | |
|---|---|---|
| Design Code: | FSA USA Standard | |
| Size:(DN) | 50 | 2 " |
| Pressure Rating : | 20 bar(g) | 290 PSI(g) |
| Max. Temperature : | 115°C | 239°F |
| Test Pressure: | 30 bar(g) | 435 PSI(g) |

| Movement Capacity: | (+) | | (-) | |
|---|---|---|---|---|
| | (mm) | (Inch) | (mm) | (Inch) |
| Axial Movement: | 12 | 0.47" | 13 | 0.52" |
| Lateral Movement: | 13 | 0.52" | 13 | 0.52" |
| Angular Movement: | 15° | 15° | 15° | 15° |

Seal & Signature

| Sl.No. | Description | Material | Pcs |
|---|---|---|---|
| 5 | Nut , Washer | SS 304 | 20 |
| 4 | Limit Rod | SS 304 | 2 |
| 3 | Lugs | SS 304 | 4 |
| 2 | Flange | SS 304 | 2 |
| 1 | Bellow | EPDM | 1 |

## Bill of Material

Title:-EPDM Floating Flange Rubber Expansion Joint with Floating Flanges

Client Name:-

Notes :

1. Bellow Tolerance will be as per FSA USA Standard.
2. Flange drill dimension will be as per ANSI B16.5#150.
3. Matching flange should be of flat face .

Testing :

1. Raw material check test for chemical composition and mechanical properties.
2. Dimension and visual check.

| No | Revision Description | Date |
|---|---|---|

DRAWN BY
CHECKED BY
APPROVED BY
SCALE: NTS
DRAWING No.
DATE
REV:- 00

OWNER :
Easyflex / VibraSystems