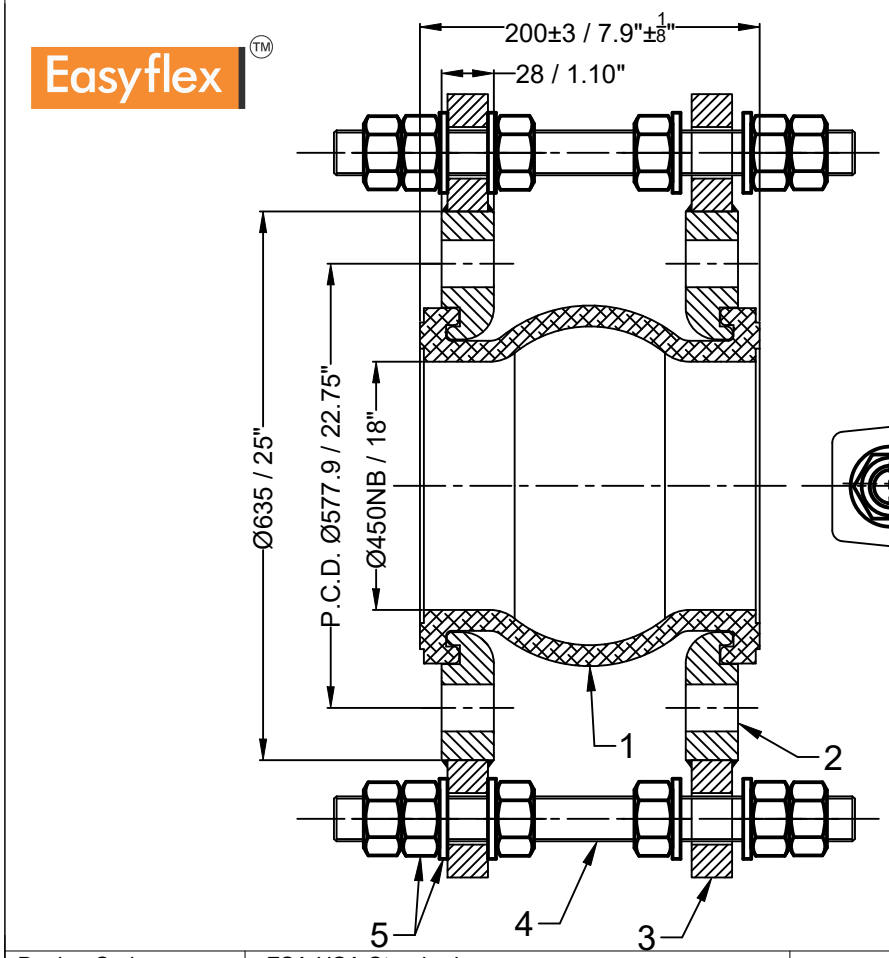

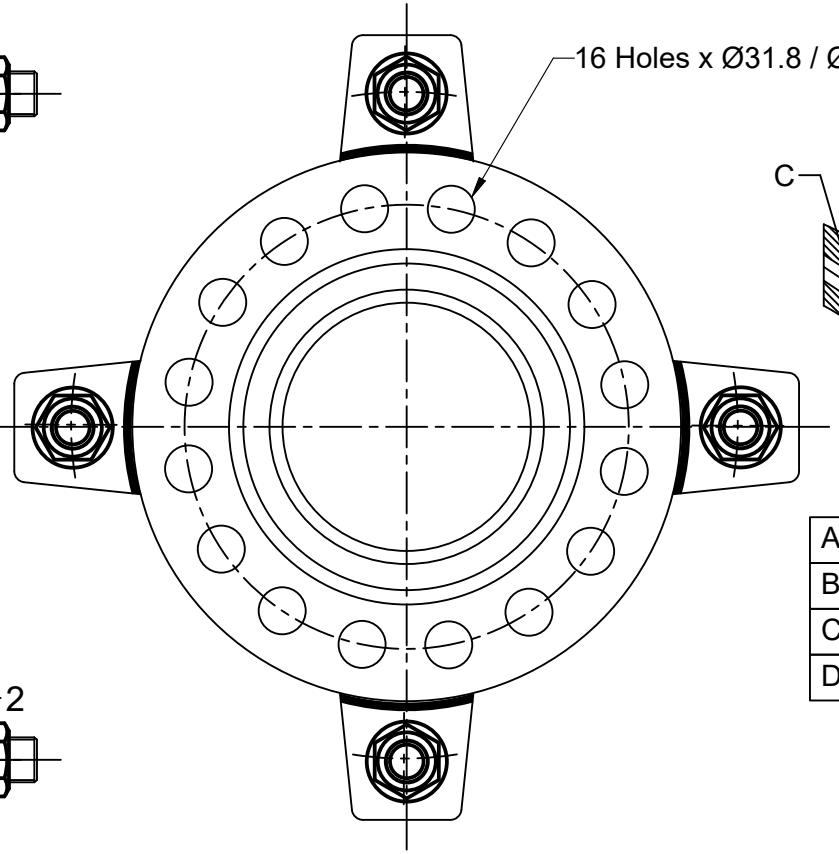

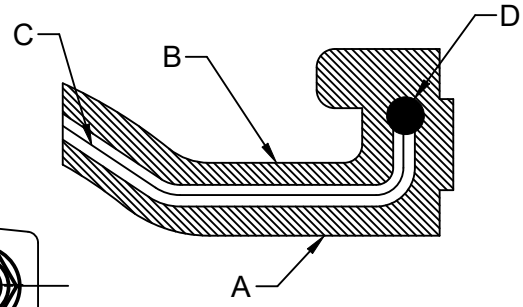

Bellow Cross-Section Details

A.	Inner Cover EPDM
B.	Outer Cover EPDM
C.	Reinforce nylon cord fabric
D.	Hard steel wire

Design Code:	FSA USA Standard	
Size:(DN)	450	18 "
Pressure Rating :	20 bar(g)	290 PSI(g)
Max. Temperature :	115°C	239°F
Test Pressure:	30 bar(g)	435 PSI(g)

Movement Capacity:	(+)		(-)	
	(mm)	(Inch)	(mm)	(Inch)
Axial Movement:	15	0.59"	16	0.63"
Lateral Movement:	16	0.63"	16	0.63"
Angular Movement:	15°	15°	15°	15°

Space for Client Approval

Seal & Signature

Sl.No.	Description	Material	Pcs
5	Nut , Washer	SS 304	40
4	Limit Rod	SS 304	4
3	Lugs	SS 304	8
2	Flange	SS 304	2
1	Bellow	EPDM	1

Bill of Material

Title:-EPDM Floating Flange Rubber Expansion Joint with Floating Flanges

Client Name:-

Notes :

1. Bellow Tolerance will be as per FSA USA Standard.
2. Flange drill dimension will be as per ANSI B16.5#150.
3. Matching flange should be of flat face .

Testing :

1. Raw material check test for chemical composition and mechanical properties.
2. Dimension and visual check.

No	Revision Description	Date

DRAWN BY
CHECKED BY
APPROVED BY
SCALE: NTS
DRAWING No.
DATE
REV:- 00

OWNER :
Easyflex / VibraSystems

Confidential : All rights reserved ISO 16016. No part of this document may be reproduced ,stored in a retrieval system , or transmitted, in any form or by any means , without prior permission. All rights reserved in the event of the granting of a patent or the registration of a utility model or design. Offenders will be held liable for the payment of damages.